The Dijkstra Algorithm

Antonio Carzaniga

Faculty of Informatics
Università della Svizzera italiana

May 23, 2023

Dijkstra's Algorithm

- Very similar to Prim's algorithm

Dijkstra's Algorithm

- Very similar to Prim's algorithm
- Variables storing values known at each iteration

Dijkstra's Algorithm

- Very similar to Prim's algorithm
- Variables storing values known at each iteration
  - $D[v]$, cost of the least-cost path from u to v

Dijkstra's Algorithm

- Very similar to Prim's algorithm
- Variables storing values known at each iteration
  - $D[v]$, cost of the least-cost path from u to v
  - $P[v]$, node preceding v (neighbor of v) on the least-cost path from u to v

Dijkstra's Algorithm

- Very similar to Prim's algorithm
- Variables storing values known at each iteration
  - $D[v]$, cost of the least-cost path from u to v
  - $P[v]$, node preceding v (neighbor of v) on the least-cost path from u to v
  - N, nodes of G whose least-cost path from u is definitely known

Dijkstra's Algorithm

```
DIJKSTRA(G, u, w)
 1  N = ∅
 2  for each vertex v ∈ V(G)
 3       D[v] = ∞
 4       P[v] = NIL
 5  D[u] = 0
 6  while N ≠ V(G)
 7       find u ∉ N such that D[v] is minimal
 8       N = N ∪ {v}
 9       for all v ∈ Adj(u) \ N
10            if D[u] + w(u, v) < D[v]
11                 D[v] = D[u] + w(u, v)
12                 P[v] = u
```

Example

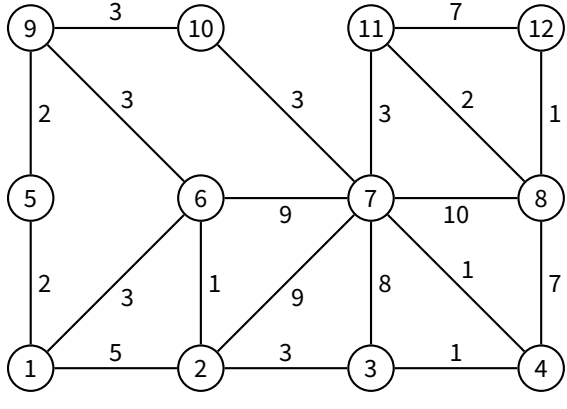

Example

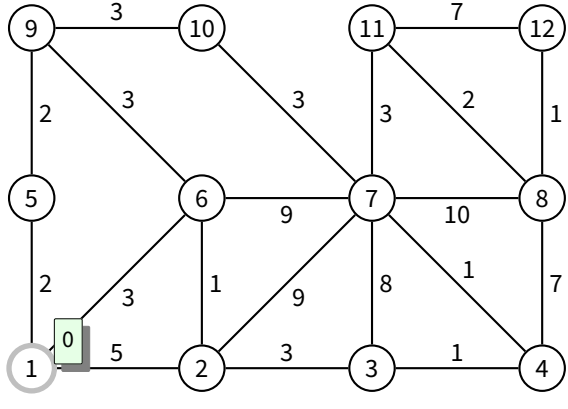

Example

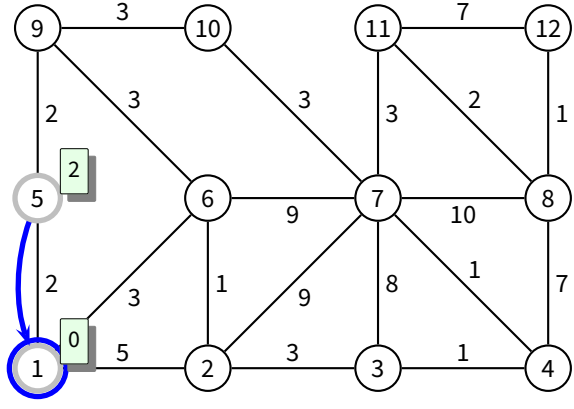

Example

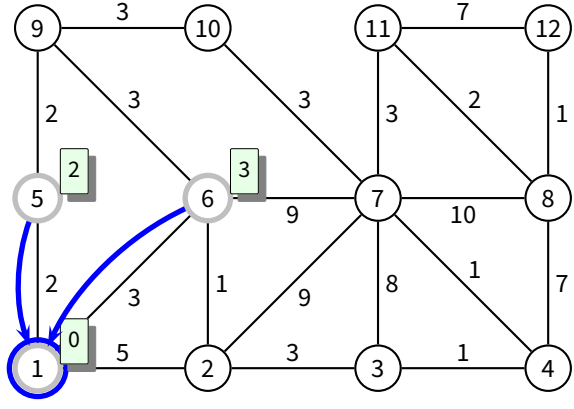

Example

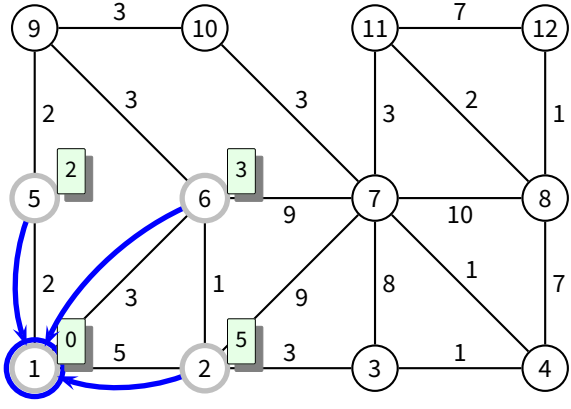

Example

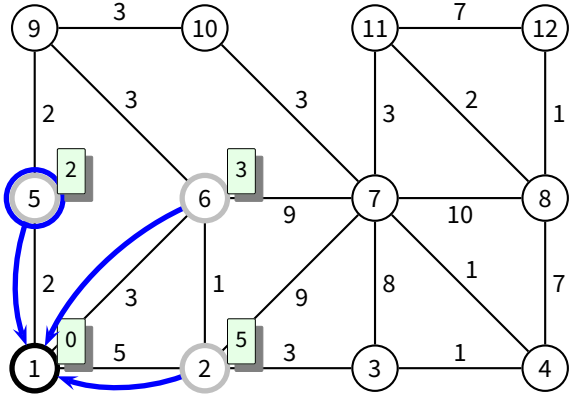

Example

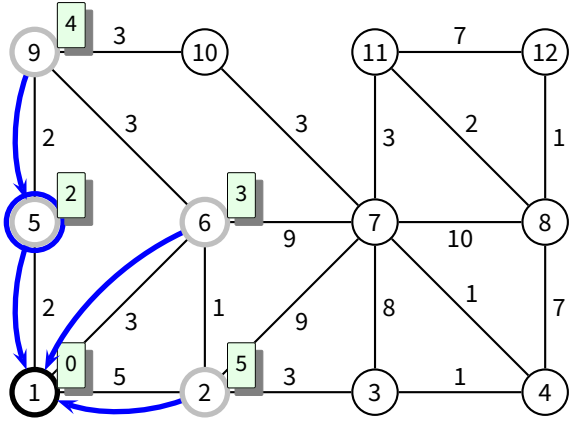

Example

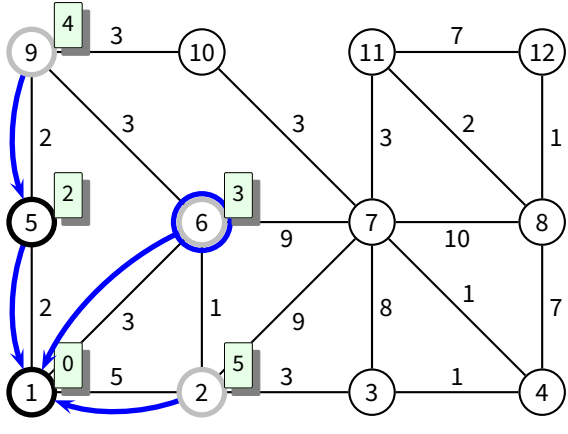

Example

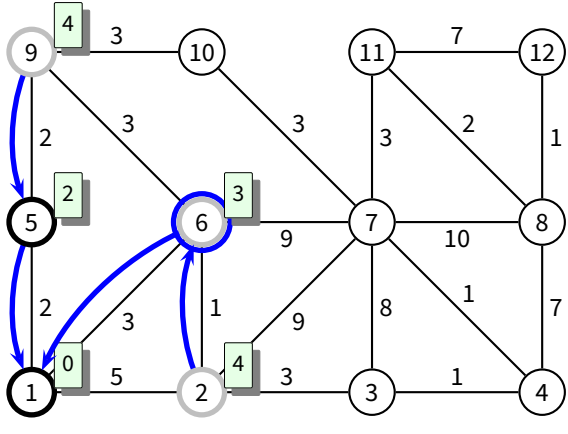

Example

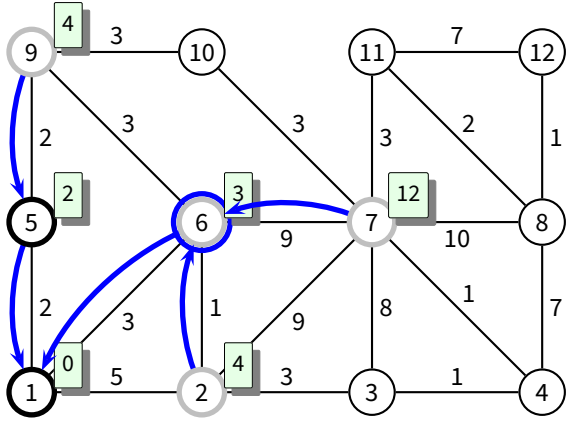

Example

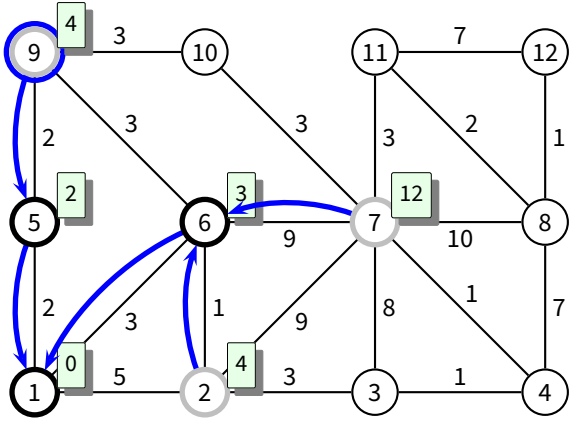

Example

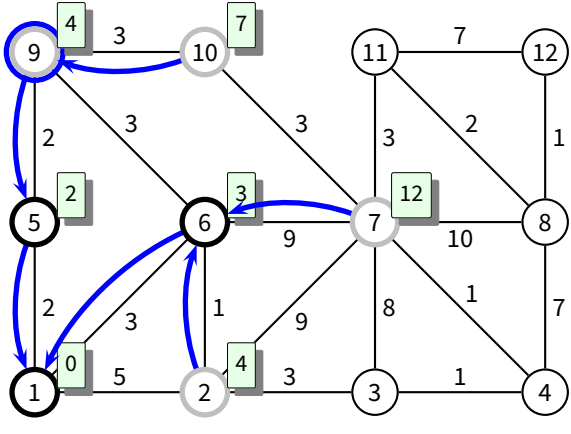

Example

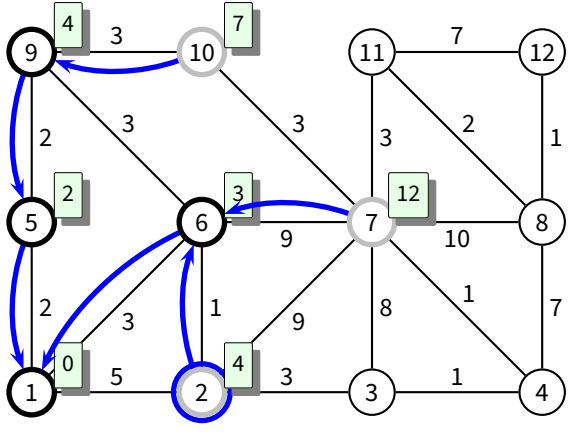

Example

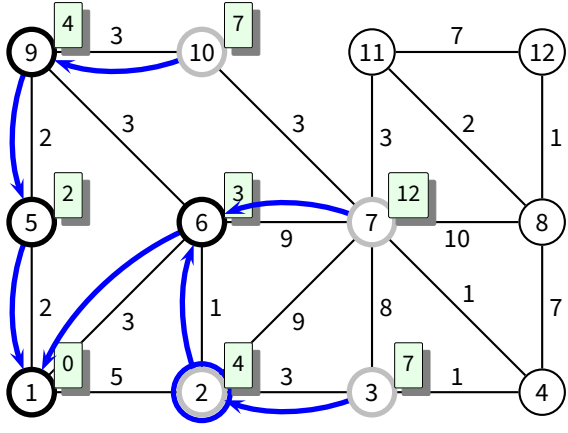

Example

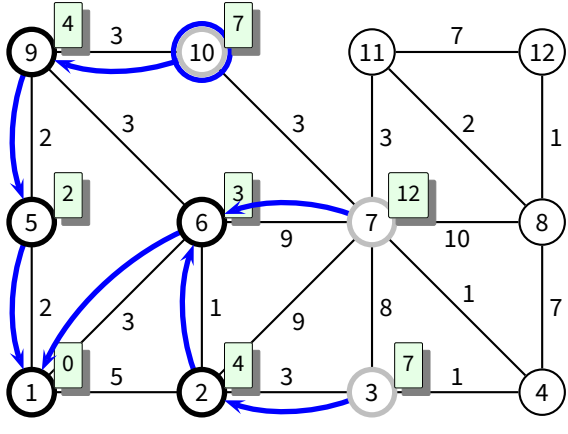

Example

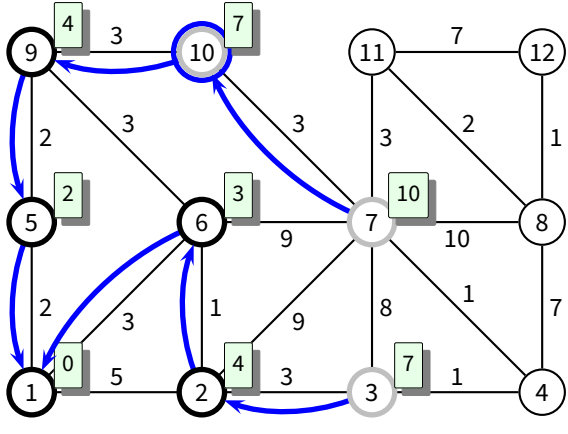

Example

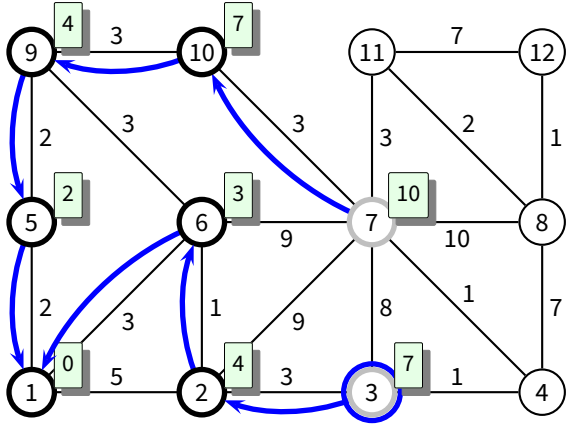

Example

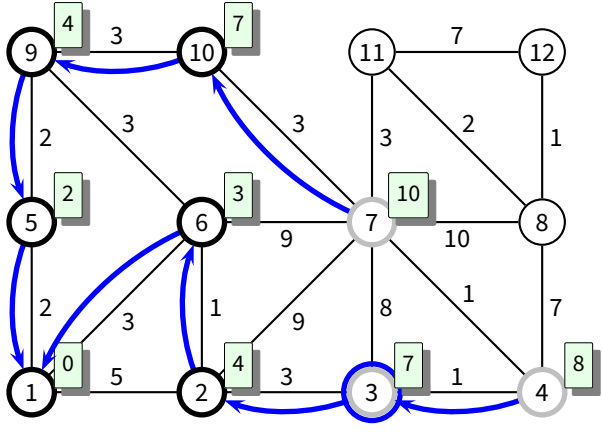

Example

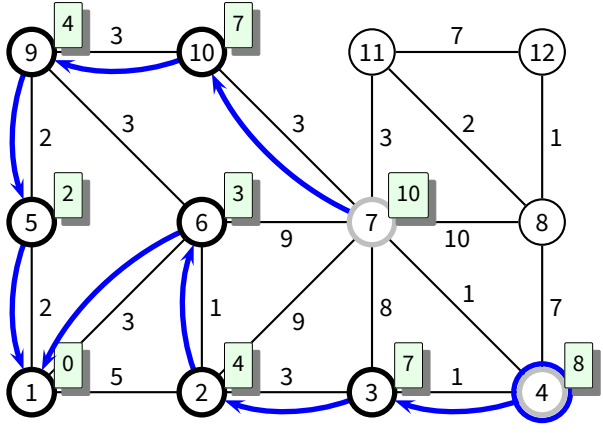

Example

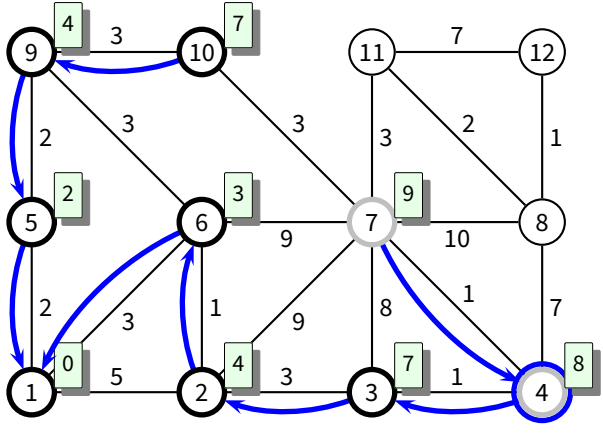

Example

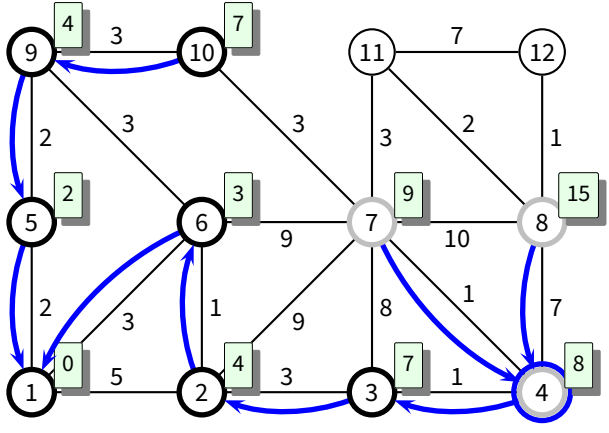

Example

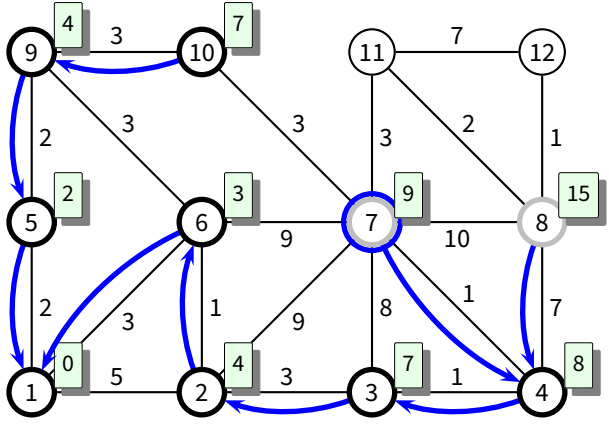

Example

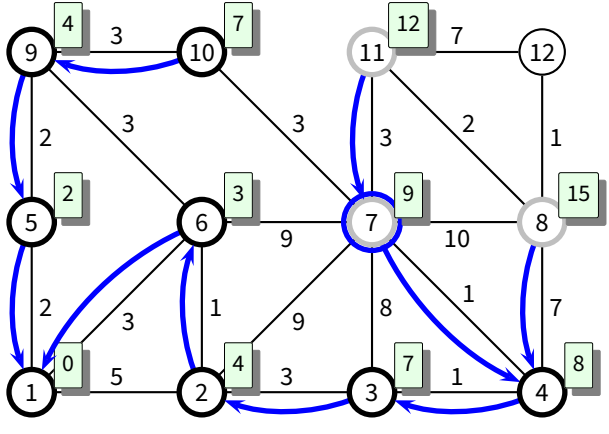

Example

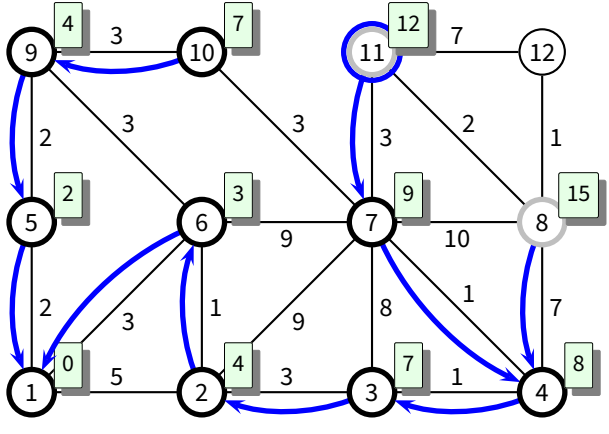
4
7
12
9
3
10
11
7
12
2
3
3
3
2
1
5
2
6
3
9
7
9
8
15
9
10
2
3
1
9
8
1
7
0
4
7
8
1
5
2
3
3
1
4

Example

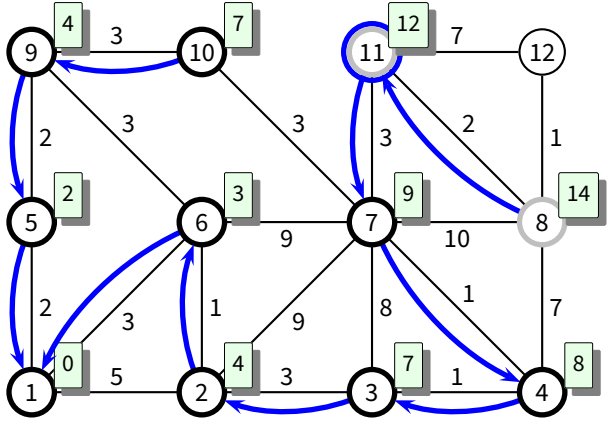
4
7
12
9
3
10
11
7
12
2
3
3
3
2
1
5
2
6
3
9
7
9
14
8
9
10
2
3
1
9
8
1
7
0
4
7
8
1
5
2
3
3
1
4

Example

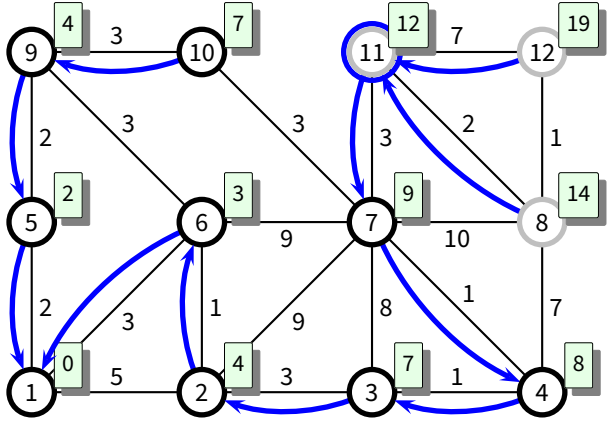
4
7
12
19
9
10
11
12
3
7
3
3
3
2
2
1
5
2
6
3
7
9
8
14
9
10
2
3
1
9
8
1
7
0
4
7
8
1
5
2
3
4
3
1

Example

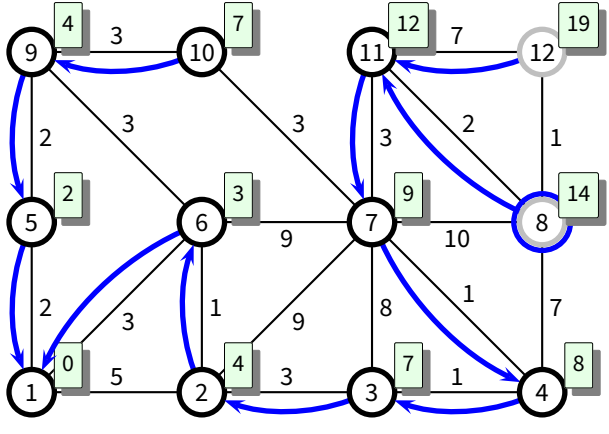
4
9
3
7
10
12
11
7
19
12
2
3
3
3
2
1
2
5
3
6
9
7
9
14
8
9
10
2
3
1
9
8
1
7
0
4
7
8
1
5
2
3
3
1
4

Example

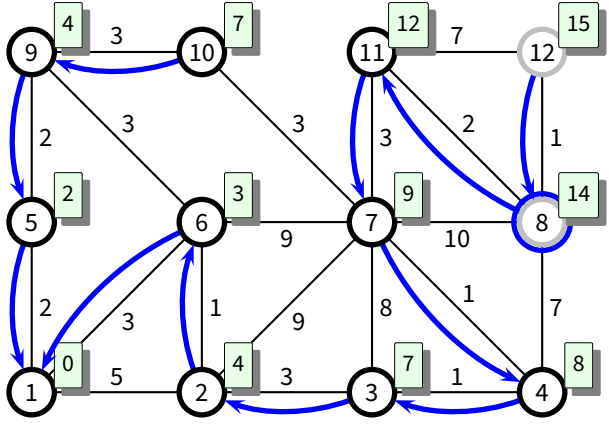

4
7
12
15
9
3
10
11
7
12
2
3
3
3
2
1
2
3
9
14
5
6
7
8
9
10
2
3
1
9
8
1
7
0
4
7
8
1
5
2
3
3
1
4

Example

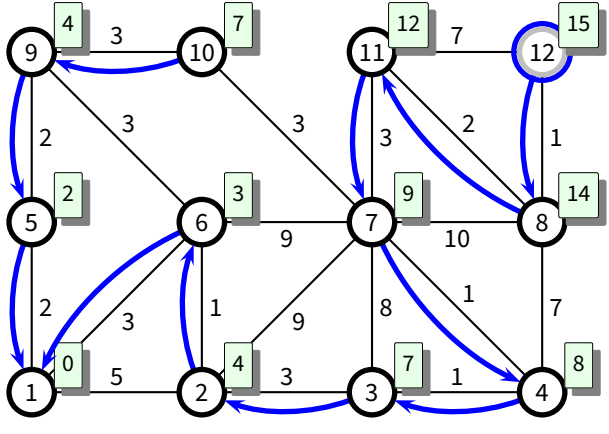

4
7
12
15
9
3
10
11
7
12
2
3
3
3
2
1
2
3
9
14
5
6
7
8
9
10
2
3
1
9
8
1
7
0
4
7
8
1
5
2
3
3
1
4

Example

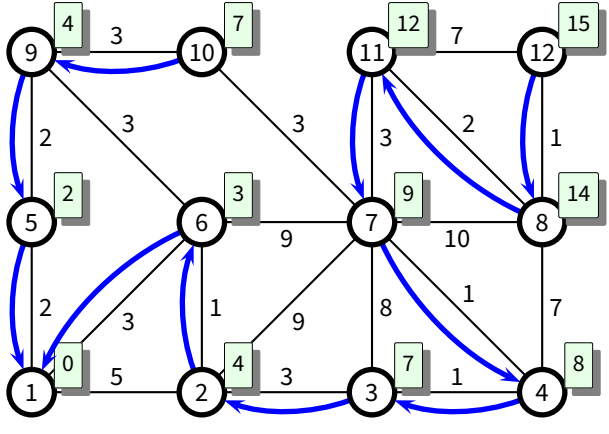
4
7
12
15
9
3
10
11
7
12
3
3
3
2
2
1
5
2
6
3
7
9
8
14
9
10
2
3
1
9
8
1
7
0
4
7
8
1
5
2
3
3
1
4